Push To Close Paddle Latches

pull to open - slam action - standard cylinder lock -

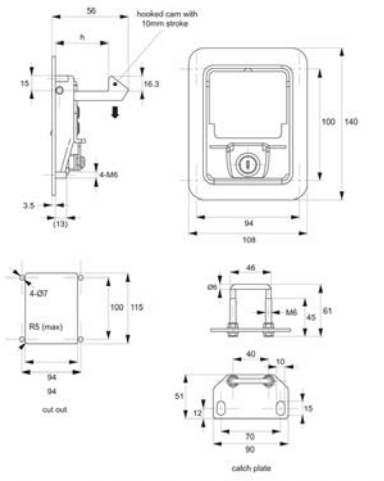

PL0712

LATCHES

Material

Body and Handle: steel, black powder coated.
Cylinder lock: die cast zinc, zinc plated.
Supplied with: Keys: two per lock.
Not Supplied: Catch plate: please order separately.

Technical Notes

Stud fixing type has 4 off M 6 welded studs for rear mounting with M 6 nuts (not supplied).
Universal left/right. For use inside of cabinet gasket.

Tips

Fully integrated lock, latch and flush fitting paddle handle, ideal for generators, compressors, electric panels and doors.

Order No.	Lock type	Type	h
PL0712.M0010	Std. Cylinder	Latch	31.5
PL0712.M0020	Std. Cylinder	Latch	44.0
PL0712.M0030	Std. Cylinder	Latch	55.0